Preface: Dear reader,
here is another installment of articles on Fuzz devices, originally written in German by our friend Bernd Meiser. It ties in quite seamlessly with the article on British effects devices previously posted - but it concentrates much more on the actual circuitry of the effects. Again, I had a lot of fun translating the article, and I hope you have as much fun reading it!

April 2019, T.Z.

From the "Effect-ive!" series of articles:

Historical Fuzz-, Distortion- and Overdrive-Devices

By **Bernd C. Meiser**, translation by **Tilmann Zwicker**

The electric guitar, set to a "clean", can sound rather thin – and, to some, not particularly attractive. So something was bound to happen at some point - and it did at the beginning of the 1960's. The "sick" sound of the first fuzz-box mightily spiced up the same-old-same-old sound of the Swingin' 60's. In fact, that "fuzzy" tone created by the Maestro Fuzz Tone really dug into the Rolling Stones' 1965 hit "Satisfaction - but that would only be the beginning...

Maestro Fuzz Tone FZ-1

The 1962 **Maestro Fuzz Tone FZ-1** (Gibson owned the Maestro brand name at the time) is, generally speaking, the first successful fuzz. The circuit has even received a patent (US Pat. Nr. US3213181). From a text-book point of view, the design was entirely catastrophic, but ... the signal was to be deliberately pushed into a different realm: distortion was the goal. Let's take a closer look.

First, the transistors: in order to keep the whole shebang cost-effective (given the background of the early 1960's), transistors of the then already aging Germanium (Ge) kind were used rather than the ultra-new and expensive Silicon devices. However, it was exactly the use of Germanium that would prove to be – sound-wise – a blessing for fuzz pedals.

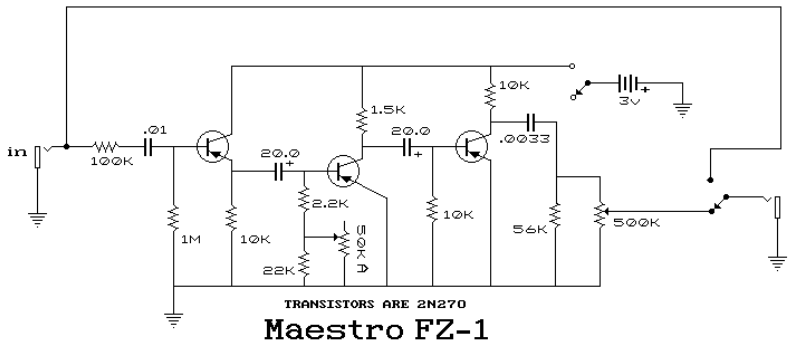

Picture sources:
http://www.studio1525.com/store/index.php?main_page=product_info&cPath=1&products_id=1536;
http://www.freestompboxes.org/viewtopic.php?f=19&t=10601&start=40

To discuss the circuit: the input transistor (Q1), a PNP-type of the OC75-kind, fails to enjoy any kind of proper operating point! To function at all in any reasonable way in its common-base configuration, this transistor would have to be connected at the base to a voltage divider i.e. one resistor each connected to ground AND to the supply voltage - no such luck here, just one lonely resistor connected to (positive) ground. In order to get anything out of the device using this "mode of operation" (if it can be called that at all), the residual current flowing from the collector to the base needs to take on a main responsibility. This can only function with a Germanium transistor make – Silicon won't cut it because here the residual current is 1000-fold weaker (in fact this would be one of the BIG advantages of Silicon vs. Germanium ... under normal circumstances, but here things ain't "normal").

In any case, this input transistor will already noticeably distort the signal – it's a kind of pre-distortion – but it will also form sort of an impedance converter with a formal gain of 1. However, given the 100-kΩ-series-resistor at the input ahead of the base, the overall gain of Q1 is less than one, it attenuates (!). Here, we stumble across a real constructive disadvantage of the FZ-1: sporting merely a SPDT-footswitch, it lacks a "true-bypass" switching. The input of the circuitry was always connected to the input signal generator (i.e. the guitar), even when the device was in "bypass"-mode, and that required this 100-kΩ-resistor that would keep the guitar signal from getting too muddy when the effect was switched off bypass-operation.

Subsequent to Q1 we have the second Ge-transistor (Q2). The "Attack"-control is of an unusual design – it (de-) trims the operating point of this stage, and at the same time operates as a kind of volume control - adventurous stuff.

And on to the third transistor (Q3), with its base being connected the same way as it was for Q1. This time, though, the transistor is configured with a collector-resistor, and it feeds the volume control. The whole circuit runs off a 3-Volt-supply provided by 2 AA batteries (each 1,5 Volt). Somewhat later, in 1966, the FZ-1A was released. It was quite similar to its predecessor – but there was now a resistor from the base of the second transistor to the supply voltage, at last giving this Q2 a most "formally set" operating point. With both the FZ-1 and the FZ-1A, the transistors all lack any negative feedback that would help to stabilize the circuit in terms of the influence of temperature changes - the emitters of Q2 and Q3 are simply directly connected to ground. The sound of this Fuzz therefore is influence by the ambient temperature.

Gary Hurst Design & Solasound

Gary Hurst's 1965-design of the **Tone Bender Mk1** corresponded, in principle, roughly to the FZ-1 – although the second transistor in fact was given a "correct" operating point with a voltage divider at the base. Gary had the idea to give the original circuit more impact and sustain, and he achieve this by (among other aspects) running the circuit off a 9-Volt supply, and by getting rid of the rather impeding series-100-kΩ-resistor at the input. The removal could be done without worry because – contrary to the FZ-1 – Gary deployed a DPDT switch (i.e. "true bypass") decoupling the input of the circuit from the guitar when the effect was switched off. Clever thinking! Hurst's design was marketed by the brothers Larry and Joe Macari (who ran a store in London called Musical Exchange) under the trade name Solasound.

Picture sources:
https://www.diystompboxes.com/smfforum/index.php?topic=102140.0;
http://www.bigmuffpage.com/images/Tonebender Images/Tone Bedner MKI_Beat Instrumental September 1965.jpg

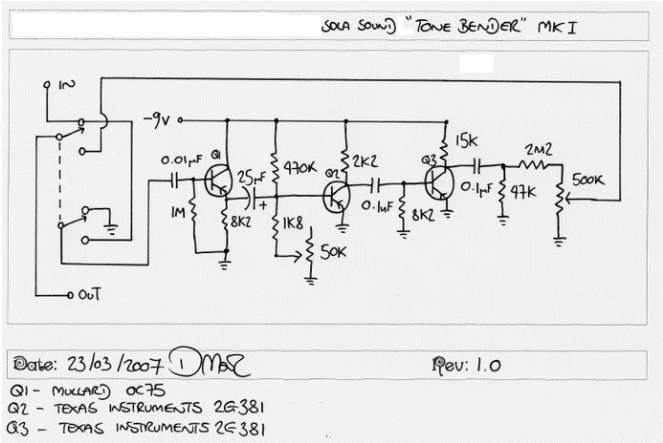

In spring of 1966 a short-lived version of the Tone bender in a completely new design was issued. The sheet-metal housing gave way to a hefty die-cast enclosure, and the circuit was also completely revamped. Because the device was again simply called Tone Bender, this series is today designated **Tone Bender Mk1.5** for clear differentiation. The circuit would later make quite a noise (sic!) in the world. The two-stage, DC-coupled amplifier was nothing spectacular per se, being sufficiently documented at the time in the corresponding electronics magazines and text books. "Normal" users would, however, keep the circuit from limiting the signal via the used of negative feedback (more on that later). To go a different route was now fast becoming the trademark of the fuzz boxes: just use a two-stage amplifier and drive it into signal limiting. The input transistor Q1 (a PNP Ge-type OC75) receives its base current via the 100-kΩ-negative-feedback resistor, the other end of which was connected to the emitter of transistor Q2. Q1 and Q2 form the mentioned directly-coupled 2-stage amplifier – with the overall gain adjustable via the "Attack"-control. The latter works in the following way: as the tap of the "Attack"-potentiometer is turned towards the emitter of Q2, the negative feedback is, electrically speaking, decreased. The gain of the contraption increases, eventually clipping the signal at the ends of the voltage range – very simple but effective. Sola Sound manufactured the circuit of the Mk1.5 mainly as OEM product that was sold as Vox Tone Bender.

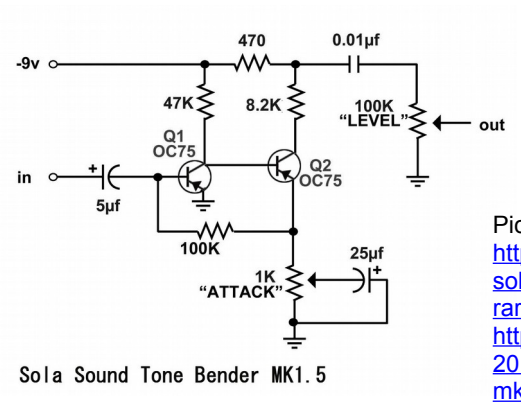

Picture sources:
https://reverb.com/item/2635423-1966-sola-sound-tone-bender-mk1-5-very-rare-pre-mkii-tone-bender-fuzz-pedal;
http://revolutiondeux.blogspot.com/2012/03/sola-sound-tone-bender-mk15.html

The subsequently issued Solasound **Tone Bender Mk2 Professional** was a much more spectacular device, first in terms of the sound, and second from the technical point of view. Again, Germanium was the order of the day back then, this time using 3 PNP transistors. Directly at the input, there is a 10-nF-capacitor connected to ground. This has the effect that – in conjunction with the guitar-pickup's inductance – the resonance frequency of the pickup is decreased: the pickup is much more mid-oriented and sounds darker and fatter. This avoids any of the thin flimsiness om terms of sound that many pickups (often rather low-output and treble-heavy) exhibited back in the day – a sound attribute that can be quite detrimental to the distortion sound. The input transistor Q1 is operating in a common-emitter configuration; again (like in the Mk1 device) there is only a single resistor connected from the base to ground so that the circuit just about/barely works making use of the residual collector current. The processing in this first stage makes the tone already rather "crunchy". The following transistor Q2 (a PNP Ge-type OC81D) received its base-current via the negative-feedback-resistor of 100 kΩ, with the other end of the resistor tied to the emitter of Q3.

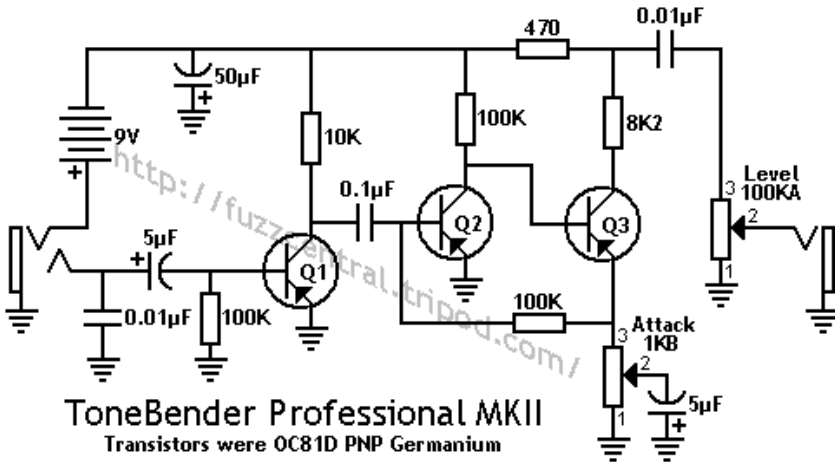

Picture sources: http://fuzzcentral.ssguitar.com/mkII.php; https://equipboard.com/items/sola-sound-tone-bender-professional-mkii

Transistors Q2 & Q3 in themselves form a directly coupled two-stage amplifier (as already discussed above) the overall gain of which can be set by the "Attack"-control. This control works again by simply decreasing the negative feedback with the effect that the gain of the arrangement increases until clipping sets in at the ends of the voltage-range. Turning down the "Attack", a major part of the crunch-sound generated by the input transistor is maintained. Only as the "Attack" is turned up, the hard clipping at the voltage limit of the Q2/Q3-Amplifier starts to dominate: we have a quite versatile fuzz here. Users were Page, Beck, possibly Clapton, and of course thousands more. Solasound manufactured the circuit of the Professional Mk2 as OEM product in slight variations as the Marshall Supa Fuzz, the Vox Tone Bender Professional Mk2 and as the Park Fuzz Sound.

Vox Tone Bender

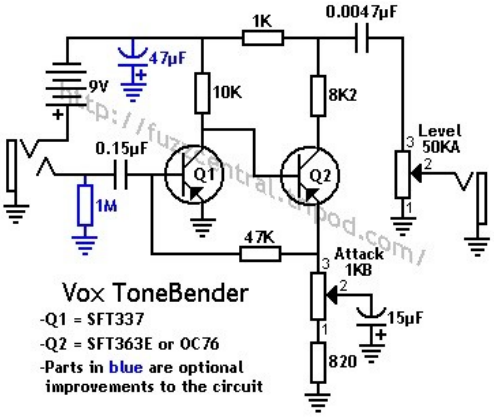

Picture sources: https://reverb.com/p/vox-tonebender-v-828-1967; https://fuzzcentral.ssguitar.com/vox.php

This popular fuzz sold like hot cakes and was marketed from the spring of 1966, as OEM-release produced by Solasound. It consisted of the two-stage amplifier circuit of the Solasound Tone Bender Mk1.5, but was manufactured in Italy, contrary to the Solasound devices. As only difference, the input- and output-capacitors were kept noticeably smaller so that a more trebly, harder sound ensued that was not as full compared to the Solasound-variant. The Vox-version was manufactured into 1970, and it may be observed that it was indeed the bestseller among the Tone Bender circuits and today is seen as "the" Tone-Bender circuit.

Dallas Arbiter Fuzz Face

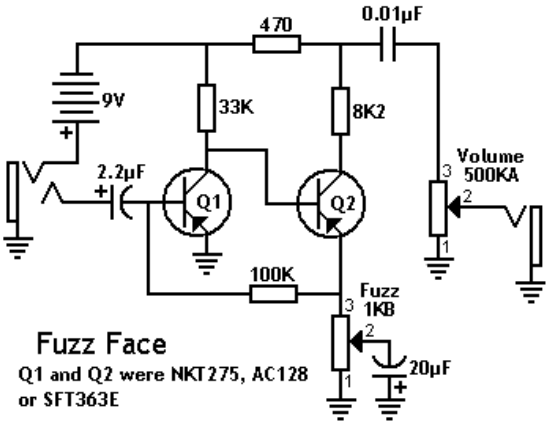

Picture sources: https://fuzzcentral.ssguitar.com/fuzzface.php; product/jdf2-7-10137-00650-8.do

Hendrix was to use this fuzz device – simple named **Fuzz Face** – for a period, and go to world-wide fame – although Roger Mayer did give Jimi's own Fuzz a makeover. The two-stage CD-coupled amplifier included in the regular production version was nothing special and already sufficiently documented at the time, as already mentioned above in the discussion of the circuit-wise closely related Tone Bender Mk1.5. The input transistor Q1, a PNP Ge-type NKT-275 (similar to the AC128), received its base current via the negative-feedback resistor of 100 kOhm, the other connector of which is tied to the emitter of transistor Q2.

In order for a halfway decent operating point to happen with this 100-kOhm resistor, the current gain (hfe) of Q1 should be chosen to be about 80 - 110. One special aspect of the AC128 is its very low cutoff frequency of only about 10 kHz, which already acts as a slight treble-cut toning down the "raspiness" of the sound. At the output we find the volume control. In 1969, the Fuzz Face was redesigned and the new silicon transistors (BC108) superseded the GE-types. The device sound noticeably harder and more aggressive but also features more gain.

Its use by Jimi Hendrix rendered the early (Germanium) Fuzz Face immortal; David Gilmour leveraged the Silicon-version to similar fame.

Solasound Tone Bender Mk3 and Mk4

Picture source: https://i.ytimg.com/vi/kLuz_GM1rQA/hqdefault.jpg; http://www.freestompboxes.org/viewtopic.php?f=13&t=14727&sid=e28e76d21562f797427a454399f1d888

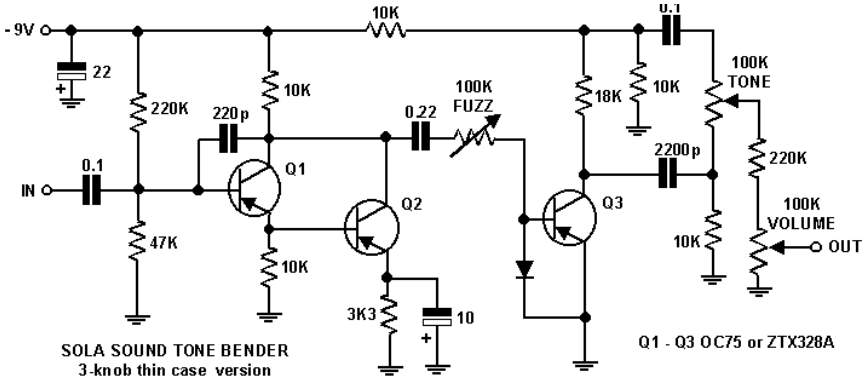

This 1968 3-knob Fuzz had an unusual design, Again, three Ge-transistors were deployed; however, the first two were configured as a Darlington arrangement in order to achieve a higher current gain compared to single transistors. This part of the circuit features a relatively linear operation and quite good temperature stability. The third transistor again lacks any kind of proper setting of the operating point but merely includes a Germanium diode connected in reverse between base and ground. This diode has (again) a considerable residual current in its back-direction connection. This arrangement around the third transistor does give a rather decent amount of distortion (controlled by the Fuzz knob) although, lacking any negative feedback, it is rather temperature dependent. The latter awkward characteristic was in fact shared by all Ge-powered stomp boxes back in the day. Towards the output, we find at one control (not unimportant) and then your customary volume control.

Around 1970, Solasound re-branded itself as **Colorsound** – the changeover was gradual, though. The Mk3 Tone Bender came in a grey enclosure, and most devices were sold as under the Vox label. The **Tone Bender Mk4** included the same circuit but sported a new, colorful sheet-metal housing.

Mosrite Fuzzrite

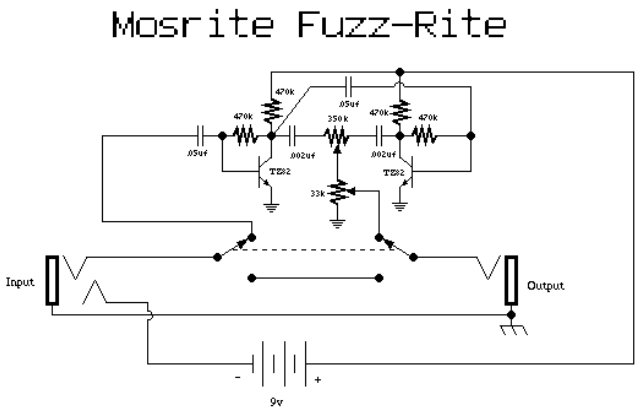

Picture sources:
http://eu11.stripper.jp/pulcino/blog/archives/000012.html;
https://elektrotanya.com/mosrite_fuzz-rite.pdf/download.html

This pedal was quite popular in the psychedelic scene in San Francisco, and can also be hear on the psycho-blockbuster "In-A-Gadda-Da-Vida“ by Iron Butterfly. Again, we find a two-stage amplifier although this time with a AC-coupling of the stages. The first 250 or so specimen were delivered with Ge-transistors, all later ones included Silicon devices. There is a pot at the output of each transistor that allows for blending from "crunch" generated by the first transistor to considerable distortion delivered by the hopelessly overdriven second transistor. Often, simple solutions are the best ... The individual Si-transistors have no current-feedback, but due to the very small residual current of Si-devices, the operating points are to a large extent independent of temperature. The obligatory volume control follows the Fuzz-control.

Jordan Boss Tone

Picture sources:
https://bb.steelguitarforum.com/viewtopic.php?t=230605&sid=079e411cbc5d0116daf81bb1d3cab226;
http://tonemachines.blogspot.com/2013/10/jordan-bosstone-1968.html

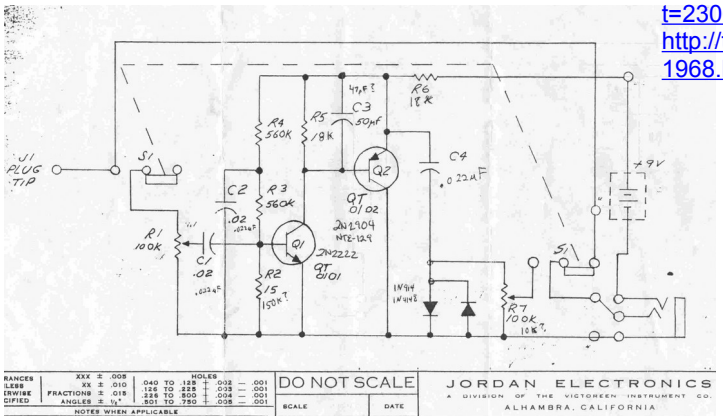

This device was not only renowned due to its small enclosure but also due to its tone. The mega-hit „Spirit in the Sky“ by Norman Greenbaum was recording using it - rumor even has it that two of these Fuzzes were connected in series. Be that as it may: this is quite a stout fuzz. Again, we find a two-stage Si-amplifier, this time in DC-coupled configuration, and in a nice, forward-looking complementary design. Something new appears here: there are two small-signal SI-diodes in anti-parallel connection at the output - they contribute a further clipping of the signal at about 0.6 Volt - just as we will later (from about 1973) get to know it in the distortion pedals. Simplifying things a bit, we could say that this circuit is a predecessor of the MXR Distortion+ that appeared some years later.

Roger Mayer

Frequency doubling in Mayer's Octavia, principle of version 1

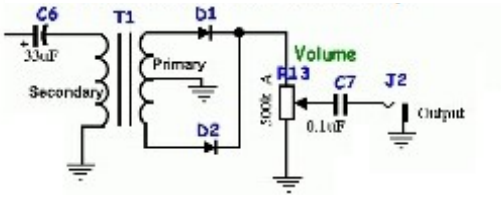

Roger met Jimi Hendrix in January of 1967 and showed him his newly developed effect pedal, the **Octavia** - which Jimi immediately deployed for his solos in „Purple Haze“ and „Fire“. For the frequency doubling effect, this first version still used a small transformer with subsequent one-way rectification via Ge-diodes. In the remainder of the circuit, Ge-transistors resided. Tychobrahe would later market a clone of this device. The first version was quickly replaced by an improved, more powerful version – now with Si-Diodes and dispensing with the transformer. The input signal is first subjected to a capacitor-loading of 470 pF - this gave Jimi's Strat a sound slightly more focused on the middle frequencies. To start with, the effect per se is generated by a two-stage amplifier - Roger put the newly available Silicon transistors to good use. The circuit is a DC-coupled complementary design with a PNP-transistor at the input and a PNP-transistor at the output. The negative feedback – and thus the overall gain – can be adjusted via a 10-kOhm-pot. A kind of frequency doubling is achieved by operating a third transistor with same-value emitter- and collector-resistors – i.e. sort of a transistorized "cathodyne"-circuit. At the emitter, we have a phase shift of 0°, while the collector-output yields 180°. The resulting signals are mixed using diodes - one half-wave each it pushed along. As a sum, we get a distorted signal of double the frequency.

Roger Mayer's Octavia, version 2

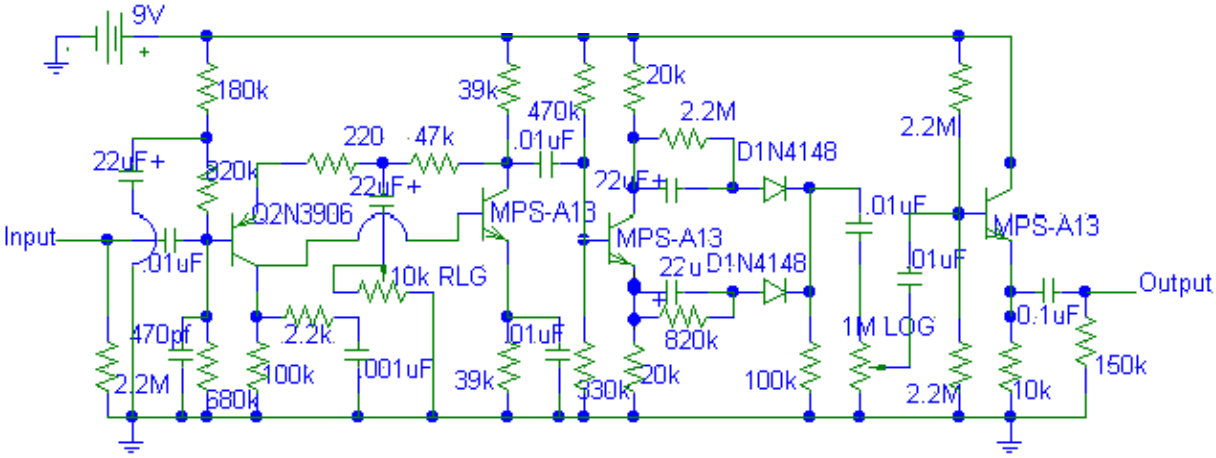

Picture-sources:
http://schems.com/Schematics/Fuzz and Fuzzy Noisemakers/?C=N;O=D;
https://en.audiofanzine.com/octaver-harmonizer-whammy/roger-mayer/Octavia/user_reviews/;
https://fuzzcentral.ssguitar.com/octavia.php;
https://www.groundguitar.com/jimi-hendrix-gear/jimi-hendrixs-roger-mayer-octavia/

Univox

This type of signal processing introduced by Roger Mayer's Octavia is mirrored in many subsequent devices and manifold modifications. I would like to mention the **Univox Super-Fuzz** that found use by Pete Townshend during the early 1970's. The Pedal was designed as an OEM-product by the Japanese manufacturer Shin-ei.

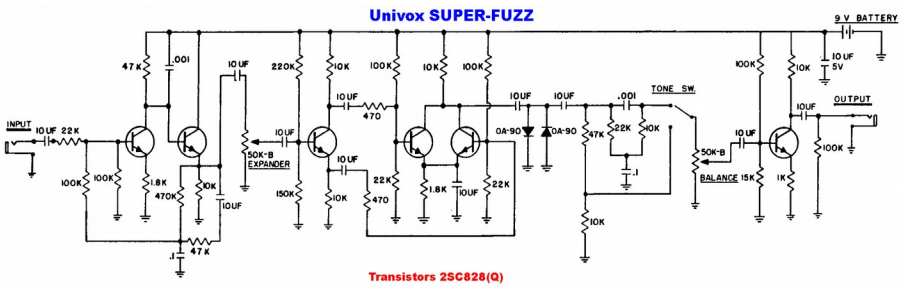

Picture sources:
https://www.coda-effects.com/2018/07/univox-superfuzz-from-70s-history-post.html;
http://revolutiondeux.blogspot.com/2012/02/univox-super-fuzz.html

In the UK, many guitar players (among them e.g. Steve Hackett of Genesis) took a liking to the **Shaftesbury Duo-Fuzz** that was based on the Univox, produced by Shin-ei, and distributed by RoseMorris.

Fender Blender

Also noteworthy is the **Fender Blender**, manufactured in the US from 1968 to 1977, with Robin Trower being a user. This device boasts 5 NPN-Si-transistors, a two-stage input amplifier, a transistorized cathodyne-type splitter with frequency doubling using Si-diodes, subsequently a makeup-gain amplifier feeding anti-parallel-connected GE-diodes for signal clipping. A switchable tone control and a volume control follow, with finally a blend control at the output for dialing in any mix between the fully distorted signal and the signal processed by the input amplifier alone. Indeed not an uninteresting circuit, despite the disadvantage that it had merely a SPDT-footswitch for on/off-selection that did not isolate the rather low input impedance from the guitar when the effect was switched off – just like the FZ-1 mentioned above.

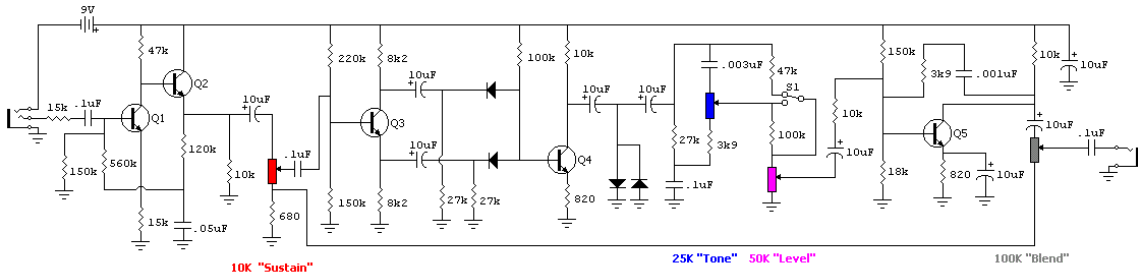

-S1 = Tone Bypass Switch (SPDT Toggle)
-Q1 & Q2 were originally 2N3391A
-Q3, Q4, Q5 were originally 2N3391
-All diodes are Germanium

Fender Blender

Picture sources:
https://fuzzcentral.ssguitar.com/blender.php
https://www.vintageguitar.com/25190/the-fender-blender/

Ibanez

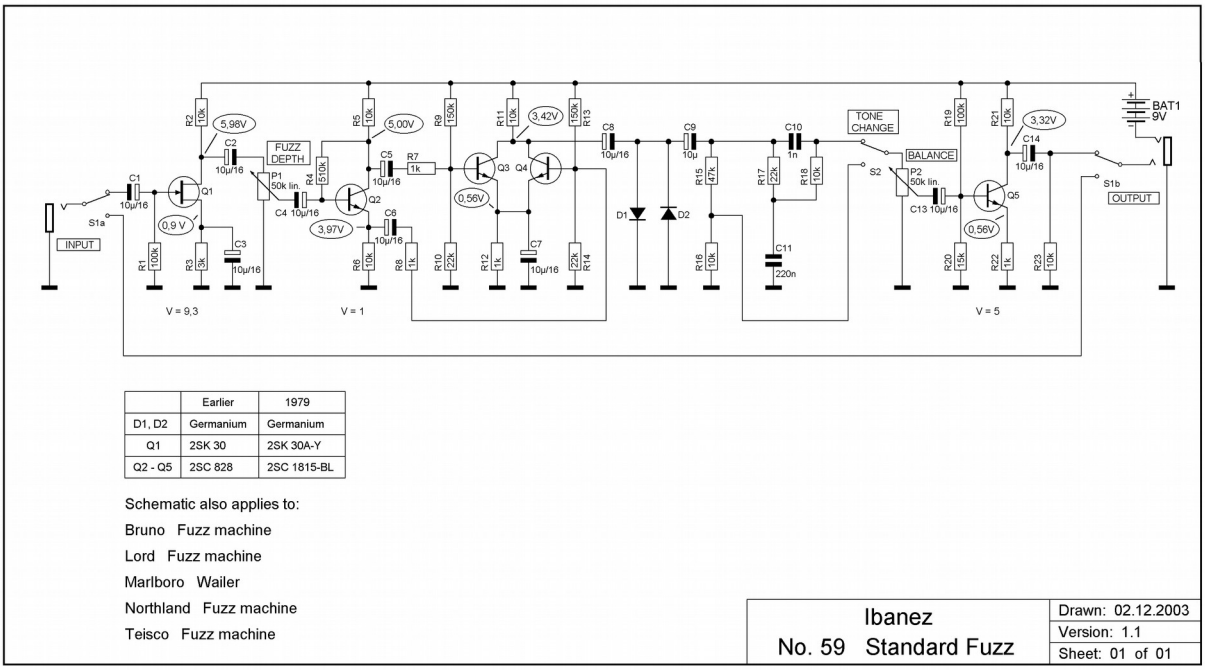

	Earlier	1979
D1, D2	Germanium	Germanium
Q1	2SK 30	2SK 30A-Y
Q2 - Q5	2SC 828	2SC 1815-BL

Schematic also applies to:
Bruno Fuzz machine
Lord Fuzz machine
Marlboro Wailer
Northland Fuzz machine
Teisco Fuzz machine

Ibanez No. 59 Standard Fuzz	Drawn: 02.12.2003
	Version: 1.1
	Sheet: 01 of 01

The 1974 **Ibanez No.59 Standard Fuzz** also was an octave-fuzz pedal and found wide distribution in Germany because it was less expensive than the British and the American stomp boxes. The frequency-doubling was realized using 2 transistors connected at their emitters and collectors, and mixing the two opposite-phase signals that were generated by a "cathodyne"-type circuit (as in Mayer's Octavia). The pedal was offered under various monikers.

Picture sources:
http://www.effectsdatabase.com/model/ibanez/first/fuzzmachine;
https://www.tonehome.de/ibanez/first-series/no-59-standard-fuzz/

Elektro Harmonix

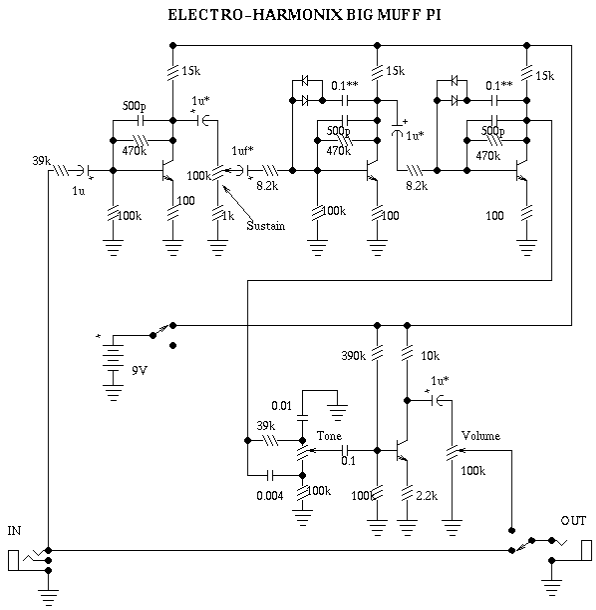

The first fuzz pedal by Mike Matthews, the technician and head of the Electro Harmonix company founded in 1968, was the 1969 **Guild "Fox Lady"** manufactured by EH as OEM-device. This pedal can be seen as the direct forerunner of the 1971 "**Big Muff PI**" that Matthews then marketed under his own company's name. The Guild pedal was configured as a three-stage AC-coupled Fuzz with subsequent tone control and a following forth transistor stage as an output amplifier. The first three transistors had a voltage divider at their bases that was, however, not connected to the supply voltage but to the collector (= output) of the respective transistor. This has the effect of a negative feedback. The first transistor represents an input amplifier with a subsequent volume control with the name "Sustain". The actual fuzz-circuit follows: a two-stage, AC-coupled configuration. However, both transistors also have two anti-parallel-connected Si-diodes positioned between the respective base and collector. This limits the output signal of each transistor - at the time a new circuit type for fuzz transistors. The two-stage fuzz circuit is followed by a tone control, and subsequently the output transistor – the latter featuring only little gain due to its not capacitor-bridged emitter resistor. At the end we find the volume control. This circuit could serve to yield very long sustain. The then young Carlos Santana is said to have used the Big Muff Pi. Save for a few component values, the circuit is in principle that of the Foxy Lady. The Big Muff Pi lived to become a bestseller, and a number of manufacturers adopted its circuit design, for example **Colorsound** in the form of their 1973 **Jumbo Tone Bender**.

Picture sources:
http://circuitscheme.com/electro-harmonix-big-muff-pi-effect.html;
http://www.effectsdatabase.com/model/guild/foxeylady;
http://www.kitrae.net/music/music_big_muff.html